DATA SHEET

ENC500™

BLOWER SOLUTION

- Complete Integrated Solution Houses Mechanical and Electrical Components
- Protects Blower and Controls from Environment
- Rugged Stainless Steel Construction
- Air Noise Reduction
- Smallest Footprint Available
- Ideal for Pre-Coding, Cap Drying, and Other Applications Requiring 5-10HP

ENC500™

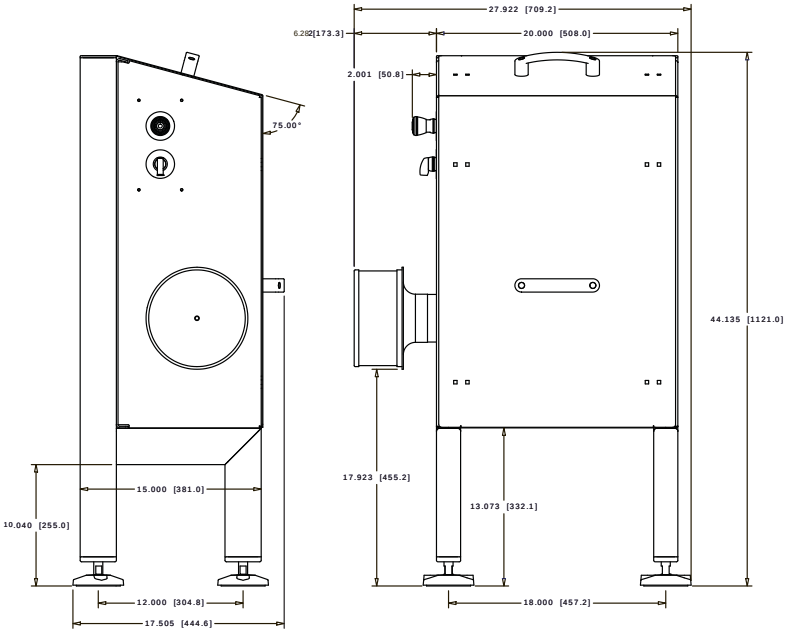

JETAIR™ TECHNOLOGIES, LLC
1756 Eastman Ave., #100, Ventura CA 93003
805-654-7000 main, 805-654-7064 facsimile
www.jetairtech.com or sales@jetairtech.com

© 2011 JetAir Technologies, LLC Specifications subject to change.